Physics Opportunities at a Muon Collider

Kirk T. McDonald
Joseph Henry Laboratories, Princeton University, Princeton, NJ 08544
mcdonald@puphep.princeton.edu, http://puhep1.princeton.edu/mumu/

The case for a future high-energy collider based on muon beams is briefly reviewed.

I. I WANT TO BELIEVE...

- That elementary particle physics will prosper for a 2nd century with laboratory experiments based on innovative particle sources.
- That a full range of new phenomena will be investigated:
  - mass $\Rightarrow$ a 2nd 3×3 (or larger?) mixing matrix.
  - Precision studies of Higgs bosons.
  - A rich supersymmetric sector.
  - ... And more ...
- That our investment in future accelerators will result in more cost-effective technology, capable of extension to 10's of TeV of constituent CoM energy.
- That a **Muon Collider** [1,2] based on ionization cooling is the best option to accomplish the above.

II. IONIZATION COOLING

(An Idea So Simple It Might Just Work)

- Ionization: takes momentum away.
- RF acceleration: puts momentum back along z axis.
- $\Rightarrow$ Transverse "cooling".

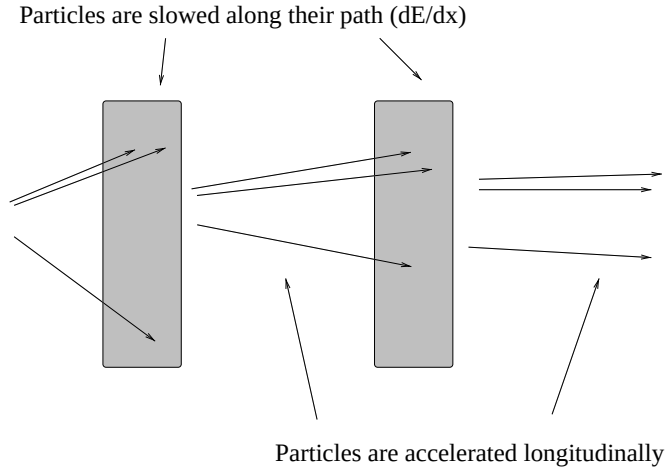

Origin: G.K. O'Neill (1956) [3].

- This won't work for electrons or protons.
- So use muons: Balbekov [4], Budker [5], Skrinsky [6], late 1960's.

III. THE DETAILS ARE DELICATE

Use channel of LH_2 absorbers, rf cavities and alternating solenoids (to avoid buildup of angular momentum).
One cell of the cooling channel:

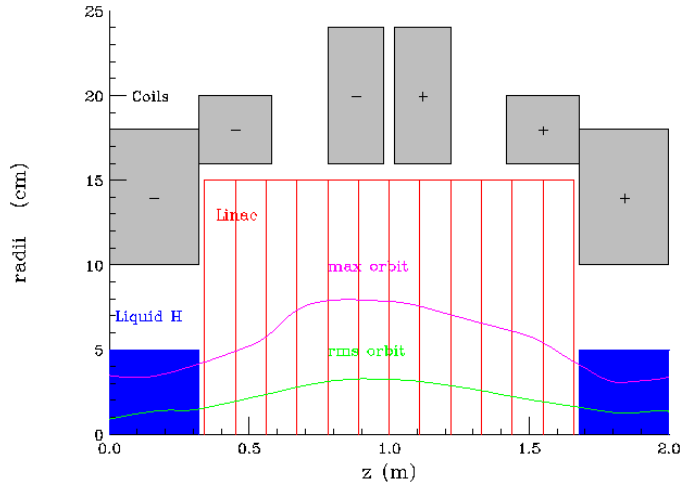

But, the energy spread rises due to "straggling".
⇒ Must exchange longitudinal and transverse emittance frequently to avoid beam loss due to bunch spreading.
Can reduce energy spread by a wedge absorber at a momentum dispersion point:

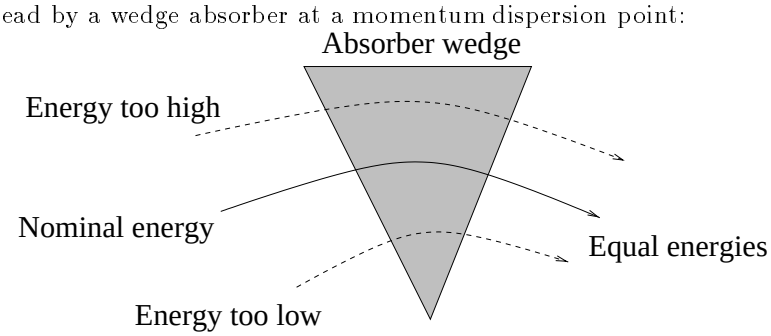

[6-D emittance constant (at best) in this process.]

IV. WHAT IS A MUON COLLIDER?

An accelerator complex in which

- Muons (both μ^+ and μ^-) are collected from pion decay following a pN interaction.
- Muon phase volume is reduced by 10^6 by ionization cooling.
- The cooled muons are accelerated and then stored in a ring.
- $\mu^+\mu^-$ collisions are observed over the useful muon life of ≈ 1000 turns at any energy.
- Intense neutrino beams and spallation neutron beams are available as byproducts.

Muons decay: $\mu \to e\nu$ ⇒

- Must cool muons quickly (stochastic cooling won't do).
- Detector backgrounds at LHC level.
- Potential personnel hazard from ν interactions.

TABLE I. Baseline parameters for high- and low-energy muon colliders. Higgs/year assumes a cross section $\sigma = 5 \times 10^4$ fb; a Higgs width $\Gamma = 2.7$ MeV; 1 year = 10^7 s.

CoM energy	TeV	3	0.4		0.1	
p energy	GeV	16	16		16	
p's/bunch		2.5×10^{13}	2.5×10^{13}		5×10^{13}	
Bunches/fill		4	4		2	
Rep. rate	Hz	15	15		15	
p power	MW	4	4		4	
μ/bunch		2×10^{12}	2×10^{12}		4×10^{12}	
μ power	MW	28	4		1	
Wall power	MW	204	120		81	
Collider circum.	m	6000	1000		350	
Ave bending field	T	5.2	4.7		3	
Depth	m	500	100		10	
Rms $\Delta P/P$	%	0.16	0.14	0.12	0.01	0.003
6d ϵ_6	$(\pi\mathrm{m})^3$	1.7×10^{-10}	1.7×10^{-10}	1.7×10^{-10}	1.7×10^{-10}	1.7×10^{-10}
Rms ϵ_n	π mm-mrad	50	50	85	195	290
β^*	cm	0.3	2.6	4.1	9.4	14.1
σ_z	cm	0.3	2.6	4.1	9.4	14.1
σ_r spot	μm	3.2	26	86	196	294
σ_θ IP	mrad	1.1	1.0	2.1	2.1	2.1
Tune shift		0.044	0.044	0.051	0.022	0.015
n_{turns} (effective)		785	700	450	450	450
Luminosity	$\mathrm{cm}^{-2}\mathrm{s}^{-1}$	7×10^{34}	10^{33}	1.2×10^{32}	2.2×10^{31}	10^{31}
Higgs/year				1.9×10^3	4×10^3	3.9×10^3

Comparison of footprints of various future colliders:

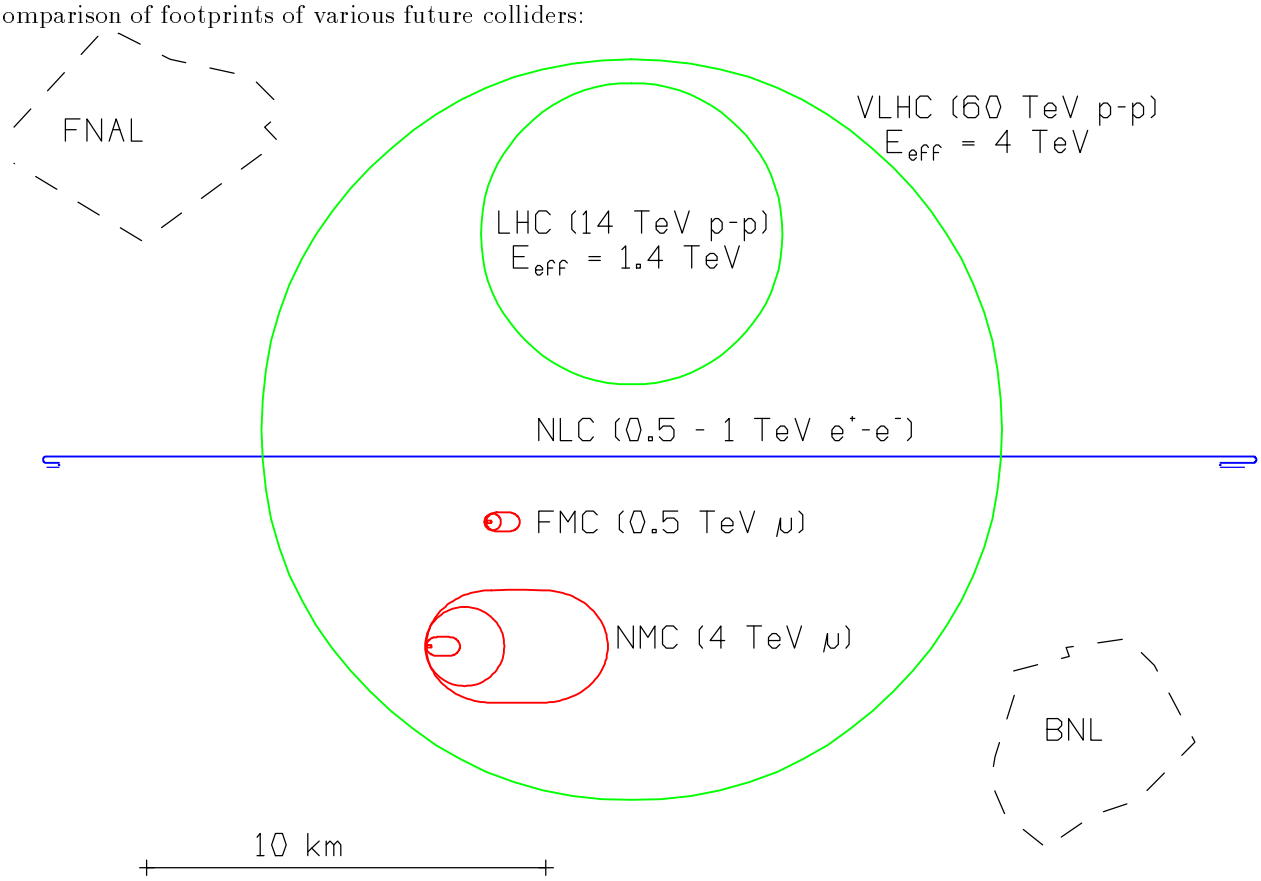

A First Muon Collider to study light-Higgs production:

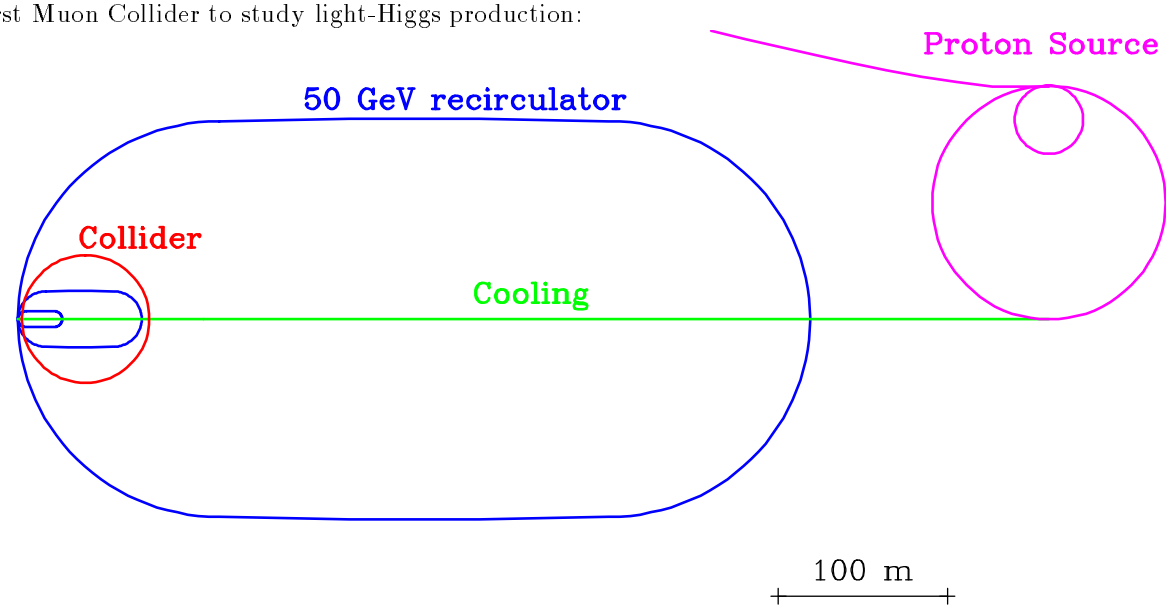

V. THE CASE FOR A MUON COLLIDER

- More affordable than an e^+e^- collider at the TeV (LHC) scale.
- More affordable than either a hadron or an e^+e^- collider for (effective) energies beyond the LHC.
- Precision initial state superior even to e^+e^- .

  Muon polarization $\approx 25\%$, $\Rightarrow$ can determine E_{beam} to 10^{-5} via $g-2$ spin precession [7].

$t\bar{t}$ threshold:

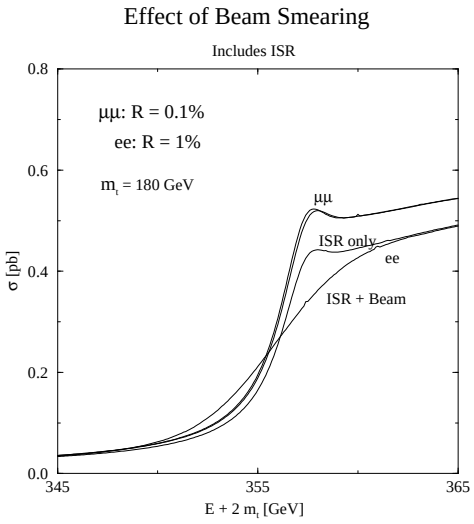

Nearly degenerate A^0 and H^0:

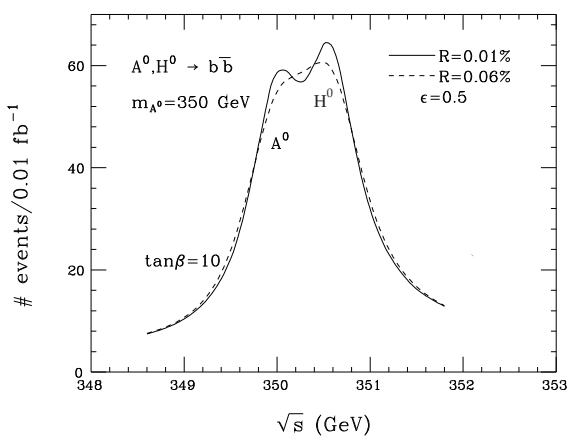

- Initial machine could produce light Higgs via s-channel [8]:

  Higgs coupling to μ is $(m_\mu/m_e)^2 \approx 40,000\times$ that to e.

  Beam energy resolution at a muon collider $< 10^{-5}$,

  $\Rightarrow$ Measure Higgs width.

  Add rings to 3 TeV later.

- Neutrino beams from μ decay about 10^4 hotter than present.

  Possible initial scenario in a low-energy muon storage ring [9].

$$\text{Study } CP \text{ violation via } CP \text{ conjugate initial states: } \begin{cases} \mu^+ \to e^+ \overline{\nu}_\mu \nu_e \\ \mu^- \to e^- \nu_\mu \overline{\nu}_e \end{cases} .$$

VI. FUTURE FRONTIER FACILITIES

(A Personal Assessment)

- Hadron collider (LHC, SSC): $\approx$ \$100k/m [magnets].

  $\approx$ 2 km per TeV of CM energy.

  Ex: LHC has 14-TeV CM energy, 27 km ring, $\approx$ \$3B.

- Linear e^+e^- collider (SLAC, NLC(?)): $\approx$ \$200k/m [rf].

  $\approx$ 20 km per TeV of CM energy;

  But a lepton collider needs only $\approx$ 1/10 the CM energy

  to have equivalent physics reach to a hadron collider.

  Ex: NLC, 1.5-TeV CM energy, 30 km long, $\approx$ \$6B (?).

- Muon collider: $\approx$ \$1B for source/cooler + \$100k/m for rings

  Well-defined leptonic initial state.

  $m_\mu/m_e \approx 200 \Rightarrow$ Little beam radiation.

  $\Rightarrow$ Can use storage rings.

  $\Rightarrow$ Smaller footprint.

  Technology: closer to hadron colliders.

  $\approx$ 6 km of ring per TeV of CM energy.

  Ex: 3-TeV muon collider, $\approx$ \$3B (?), would have physics reach well beyond the LHC.

VII. MUON COLLIDER R&D PROGRAM

- Targetry and Capture at a Muon Collider Source [10,11].

  Baseline scenario:

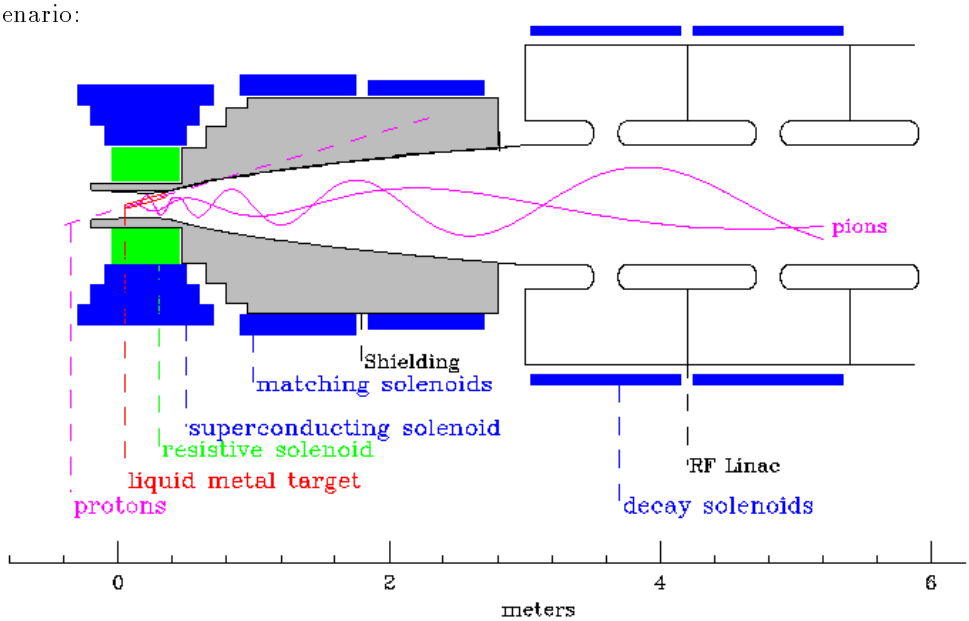

To achieve useful physics luminosity, a muon collider must produce about 10^{14} μ/sec.

- $\Rightarrow > 10^{15}$ proton/sec onto a high-Z target $\Leftrightarrow$ 4 MW beam power.
- Capture pions of $P_\perp \lesssim 200$ MeV/c in a 20-T solenoid magnet.
- Transfer the pions into a 1.25-T-solenoid decay channel.
- Compress π/μ bunch energy with rf cavities and deliver to muon cooling channel.

Proposed R&D facility:

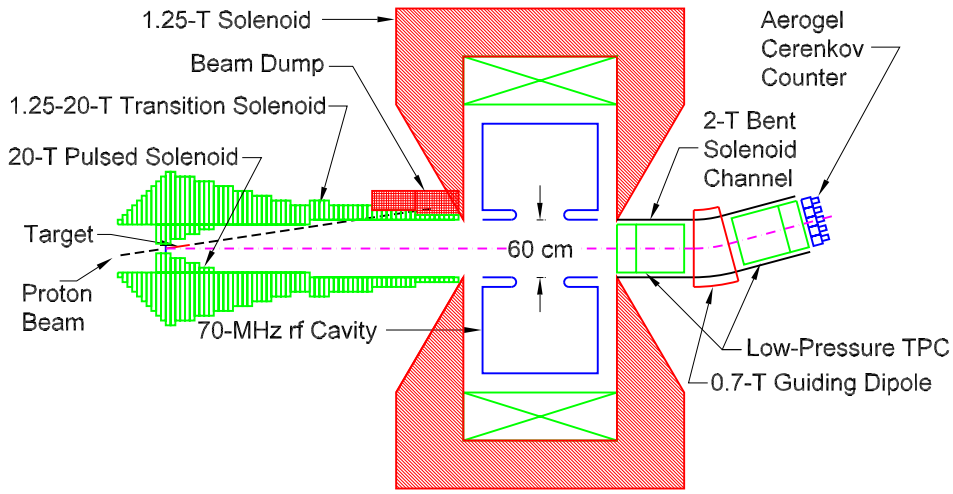

- Ionization Cooling for a High Luminosity Muon Collider [12,13].

  Test basic cooling components:

  - Alternating solenoid lattice, RF cavities, LH_2 absorber.
  - Lithium lens (for final cooling).
  - Dispersion + wedge absorbers to exchange longitudinal and transverse phase space.

  Track individual muons; simulate a bunch in software.

  Possible site: Meson Lab at Fermilab:

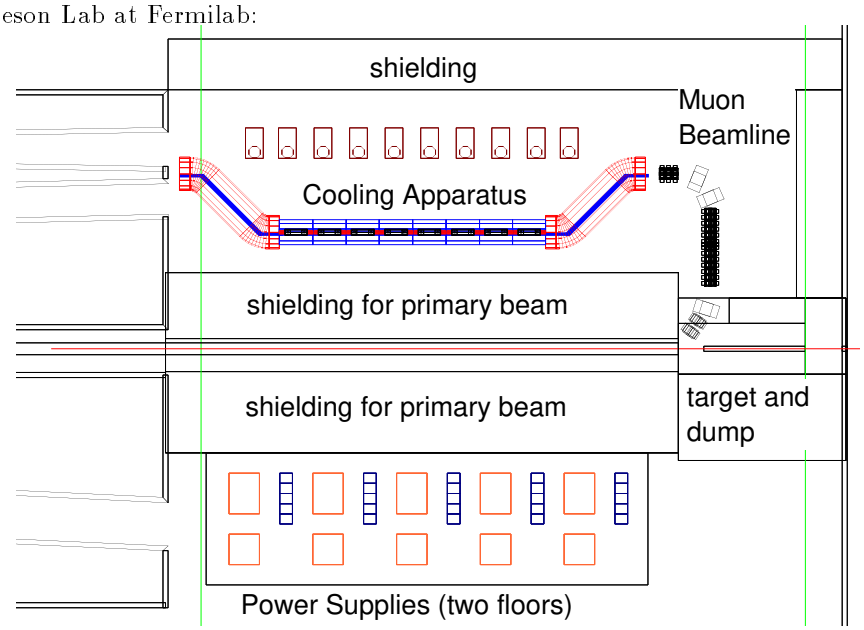

Cooling channel components:

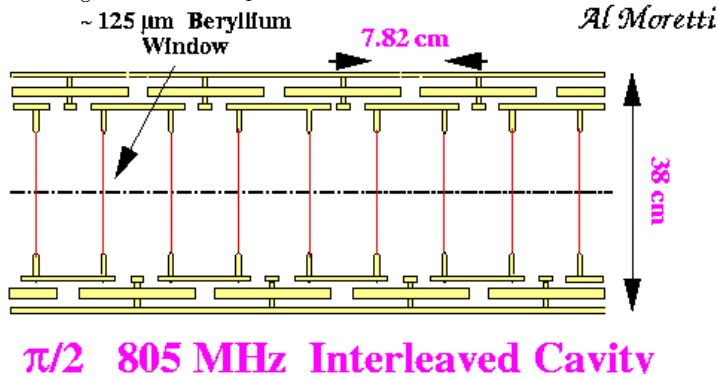

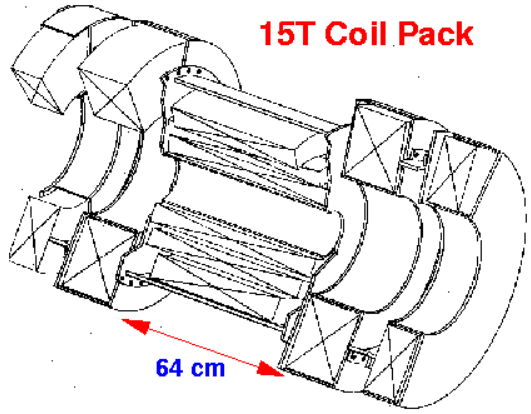

VIII. UPCOMING WORKSHOPS

(See http://www.cap.bnl.gov/mumu/table_workshop.html)

- Muon Collider Collaboration Meeting, May 20-26, 1999, St. Croix.
- Neutrino Factories Based on Muon Accumulators, July 5-9, 1999, Lyon/CERN.
- Muon Colliders at the Highest Energies, Sept. 27-Oct. 1, 1999, Montauk, NY.
- Physics Potential and Development of $\mu^+\mu^-$ Colliders, Dec. 14-19, 1999, San Francisco.

---

[1] C.M. Ankenbrandt *et al.*, *Status of Muon Collider Research and Development and Future Plans*, submitted to Phys. Rev. Sp. Top. – Acc. Beams; http://xxx.lanl.gov/abs/ps/physics/9901022

[2] Muon Collider Collaboration web page: http://www.cap.bnl.gov/mumu/mu_home_page.html

[3] G.K. O'Neill, *Storage-Ring Synchrotron: Device for High-Energy Physics Research*, Phys. Rev. **102**, 1418 (1956); http://puhep1.princeton.edu/mumu/physics/oneill/1.html

[4] Yu.M. Ado and V.I. Balbekov, *Use of Ionization Friction in the Storage of Heavy Particles*, Sov. Atomic Energy **31**, 731 (1971); http://puhep1.princeton.edu/mumu/physics/ado/1.html

[5] G.I. Budker, *Accelerators and Colliding Beams* (in Russian), in *Proc. 7th Int. Conf. on High Energy Accel.* (Yerevan, 1969), p. 33; extract: AIP Conf. Proc. **352**, 4 (1996); Int. High Energy Conf. (Kiev, 1970), unpublished; extract: AIP Conf. Proc. **352**, 4 (1996).

[6] A.N. Skrinsky, *Intersecting Storage Rings at Novosibirsk*, Proc. Int. Seminar on Prospects of High-Energy Physics (Morges, Mar. 1971), unpublished; extract: AIP Conf. Proc. **352**, 6 (1996).

[7] R. Raja and A. Tollestrup, *Calibrating the energy of a 50×50 GeV Muon Collider using $g-2$ spin precession*, Phys. Rev. D **58**, 013005 (1998); http://xxx.lanl.gov/ps/hep-ex/9801004

[8] S. Geer and R. Raja (eds.), *Workshop on Physics at the First Muon Collider and at the Front End of the Muon Collider*, (Fermilab, Nov. 1997), AIP Conf. Proc. **435** (1998); http://www.fnal.gov/projects/muon_collider/physics/talks.html

[9] http://nicewww.cern.ch/~autin/MuonsAtCERN/Neutrino.htm

[10] J. Alessi *et al.*, *An R&D Program for Targetry at a Muon Collider*, proposal to the BNL AGS (Sept. 1998); http://puhep1.princeton.edu/mumu/target/targetprop.ps

[11] Targetry web page: http://puhep1.princeton.edu/mumu/target/

[12] C. N. Ankenbrandt *et al.*, *Ionization Cooling Research and Development Program for a High Luminosity Muon Collider*, Fnal-P904 (April 15, 1998); http://www.fnal.gov/projects/muon_collider/

[13] Cooling R&D web page: http://www.fnal.gov/projects/muon_collider/cool/cool.html